HD-064 Ultra-high density inserts

250V 10A 64+ ⏚

EAC

Inserts

Hoods/Housings: size 24B, please find the details on page 15-108~15-150.

Crimp terminal

order crimp contacts separately

Insert	Designation	Order No.
Male	HD-064-MC	125 064 010 0001
Female	HD-064-FC	125 064 020 0001

Wrap terminal[1] 1x1 mm

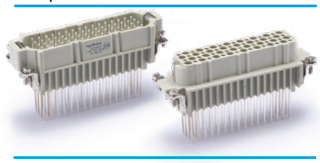

Insert	Designation	Order No.
Male	HD-064-MTHT	125 064 014 0001
Female	HD-064-FTHT	125 064 024 0001

1) See P00-14 for the structural characteristics of wrap terminal.

1) Distance for contact max. 21 mm

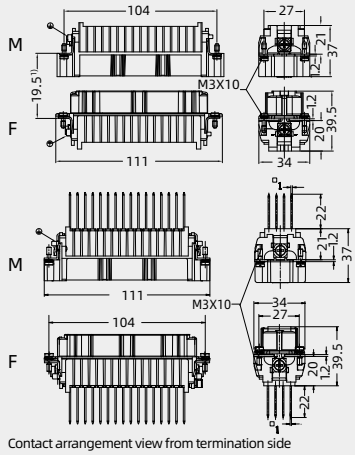

Contact arrangement view from termination side

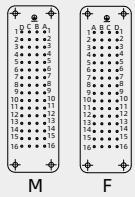

Panel cut out for inserts for use without hoods/housings

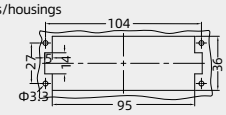

Crimp contacts

Crimp contacts 10A

Contact resistance ≤ 3mΩ
silver plated

gold plated

Male	Order No.	Female	Order No.
CDSM-0.25	101 017 110 0101	CDSF-0.25	101 017 120 0101
CDSM-0.37	101 017 110 0301	CDSF-0.37	101 017 120 0301
CDSM-0.50	101 017 110 0401	CDSF-0.50	101 017 120 0401
CDSM-0.75	101 017 110 0601	CDSF-0.75	101 017 120 0601
CDSM-1.0	101 017 110 0801	CDSF-1.0	101 017 120 0801
CDSM-1.5	101 017 110 0901	CDSF-1.5	101 017 120 0901
CDSM-2.5	101 017 110 1001	CDSF-2.5	101 017 120 1001
CDGM-0.25	101 017 210 0101	CDGF-0.25	101 017 220 0101
CDGM-0.37	101 017 210 0301	CDGF-0.37	101 017 220 0301
CDGM-0.50	101 017 210 0401	CDGF-0.50	101 017 220 0401
CDGM-0.75	101 017 210 0601	CDGF-0.75	101 017 220 0601
CDGM-1.0	101 017 210 0801	CDGF-1.0	101 017 220 0801
CDGM-1.5	101 017 210 0901	CDGF-1.5	101 017 220 0901
CDGM-2.5	101 017 210 1001	CDGF-2.5	101 017 220 1001

More crimp contacts 10A
see P13-02,P13-03.

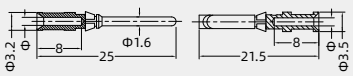

Wire gauge		Φ	Stripping length
0.09-0.25 mm²	AWG 28-24	0.65	5 mm
0.14-0.37 mm²	AWG 26-22	0.9	8 mm
0.5 mm²	AWG 20	1.1	8 mm
0.75 mm²	AWG 18	1.3	8 mm
1 mm²	AWG 18	1.45	8 mm
1.5 mm²	AWG 16	1.75	8 mm
2.5 mm²	AWG 14	2.25	6 mm

When the wire gauge is less than 0.75mm2,it's better to use the auxiliary pin assembly tool TL15.

Tools

Crimping tool

Contact removal tool

Wire gauge	Designation	Order No.
0.14-4mm²	TL02G	198 001 001 0011

For the crimping contacts and removing contacts instructions, please find the page 06-23~06-24.

Application	Designation	Order No.
for crimp contacts 10A	TL00	198 001 000 0001

More tools detail please find the page32-03~32-06.

Notes: The tools for crimp terminal may influence the product quality and stability.
Please select the tools recognized by our company.